1. MATERIAL: TYPE 304 STAINLESS STEEL.
2. 125 Ra ALL MACHINED SURFACES.
3. PASSIVATE PER FEDERAL SPECIFICATION SAE-AMS-QQ-P-35.
4. ENGRAVE OR ELECTRIC ARC SCRIBE DRAWING PART NUMBER G13706MRA004 ON SPECIFIED SURFACE, PER SAE-AS478, METHOD 3 OR 4 (ZONE E7).
5. CLEAN SURFACES WITH 190 PROOF ETHYL ALCOHOL. WIPE WITH CLEAN COTTON SWABS AND/OR LINT-FREE CLOTH.
6. HANDLE WITH CLEAN, LINT-FREE GLOVES.
7. BEFORE STORAGE, PROTECT WITH CONTAMINATION BARRIER. USE CLEAN, NEW, TRANSPARENT, POLYETHYLENE BAG FOR SMALL ITEMS, OR 4 MIL THICK MINIMUM POLYETHYLENE SHEET SEALED WITH FIBERGLASS PACKAGING TAPE. SEAL AND MARK WITH IDENTIFICATION NUMBER ON TAG ATTACHED TO BAG.
8. ESTIMATED WEIGHT: 3.38 LBS.

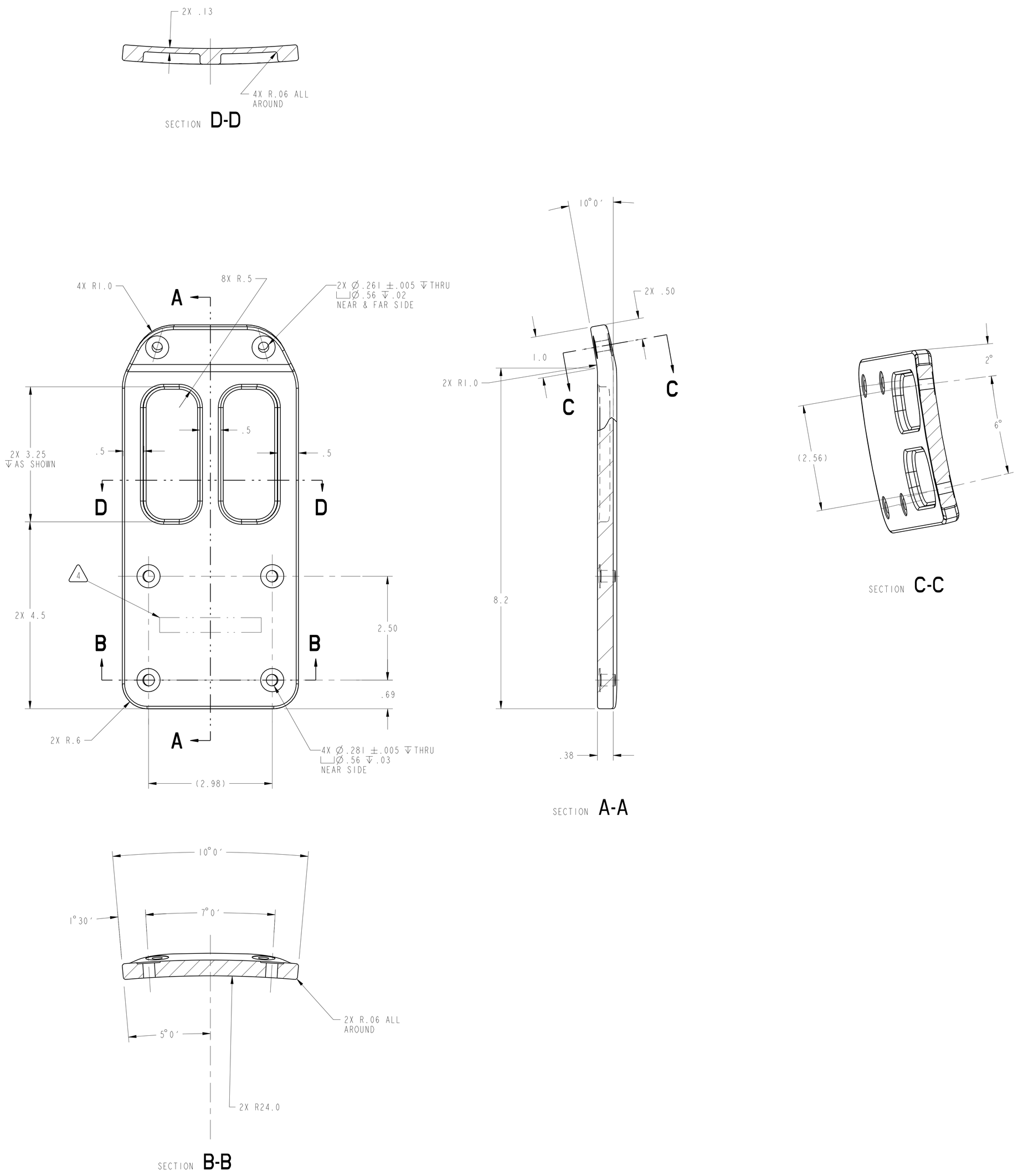

CHG	ZONE	DESCRIPTION	APP/DATE

REVISIONS

PRIOR TO USE VERIFY THE INTENDED PURPOSE IN PDM ("FOR" ATTRIBUTE)

UNLESS OTHERWISE SPECIFIED DIMENSIONS ARE IN INCHES

CONTRACT NNC06BA07B
CONTRACTOR ASRC AEROSPACE

TOLERANCE ON		TASK ORDER	G13706
.X	± 0.03	DRAFTER	ASRC/D. ROBINSON
.XX	± 0.01	ENGINEER	DETO/R. CHRISTIE
.XXX	± 0.005	DESIGNER	ASRC/D. ROBINSON
FRACTION	± -	DIMENSIONING AND TOLERANCING PER ASME Y14.5M-1994	
ANGULAR	± 0.25°		
BREAK EDGES	.01-.02		

PDM REL LEVEL: PDM REVISION:

PDM DATABASE: NOT UNDER CONFIG MANAGEMENT
MODEL NAME: G13706_STRUT_ATTACH_PLATE
CHECK FOR ANY OUTSTANDING ECO'S PRIOR TO USE

NATIONAL AERONAUTICS AND SPACE ADMINISTRATION
JOHN H. GLENN RESEARCH CENTER
LEWIS FIELD
CLEVELAND, OHIO

STRUT ATTACHMENT PLATE ASSEMBLY
G13706MRA003

A004 STRUT ATTACHMENT PLATE

SIZE	DRAWING NUMBER	REV	BLDG	AREA
E	G13706MRA004		-	-

UNITS: INCH

SCALE:	INITIAL REL DATE	SHEET	DISCIPLINE
1/1	XX/XX/XXXX	1 OF 1	MECHANICAL

PRO/E VERSION: Wildfire 3.0

SIZE E DRAWING NUMBER G13706MRA004 REV A

NAME:DAROBIN1 OBJECT:G13706MRA004_ATTACH_PLATE DATE:31-Aug-11 09:49:48