NOTES. UNLESS OTHERWISE SPECIFIED

1. COAT INDICATED HATCHED SURFACES PER MIL-DTL-5541F, TYPE I, CLASS 3
2. ANODIZE PER MIL-A-8625F, TYPE II, CLASS 2, COLOR BLACK.
3. MARK VERTICAL LINE EVERY TENTH GROOVE ON BOTH SIDES IAW NOTE 5. TERMINATE LINE 4.9 FROM A
4. MARK PART NUMBER, REVISION LEVEL, AND UNIQUE SERIAL NUMBER WITH 3.0 HIGH CHARACTERS IAW NOTE 5. EX: 2146121-05 REV A, 001
5. LASER ENGRAVE PART 0.015 DEEP MAX.
6. INSTALL INSERTS PER NASM33537 AFTER SURFACE TREATMENT. REMOVE DRIVING TANG
   ORIGINAL SOURCE OF SUPPLY:
   EMHART FASTENING TERNOLOGIES
   INDUSTRIAL DIVISION
   510 RIVER ROAD
   SHELTON, CT 06484
7. DIMENSIONS APPLY AFTER ALL SURFACE TREATMENTS.
8. TAPER FROM 3 MM TO 1.6 MM WIDE CROSS SECTIONS. TRANSITION WHERE INDICATED.

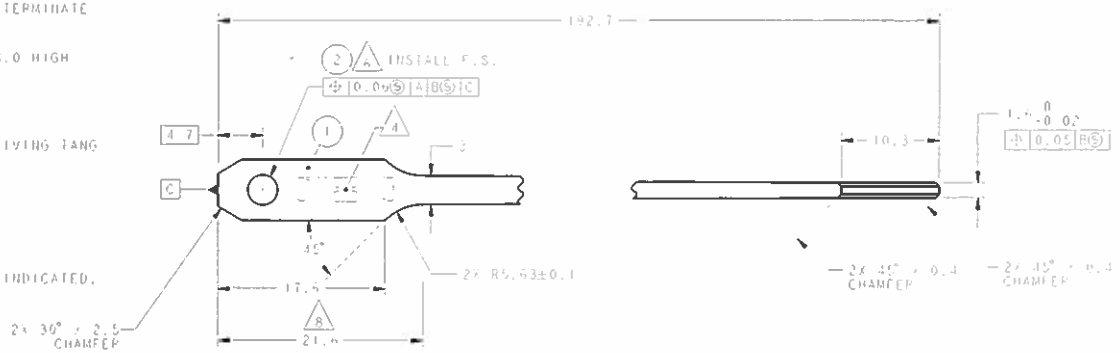

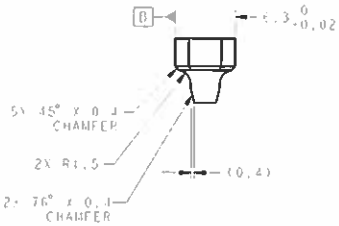

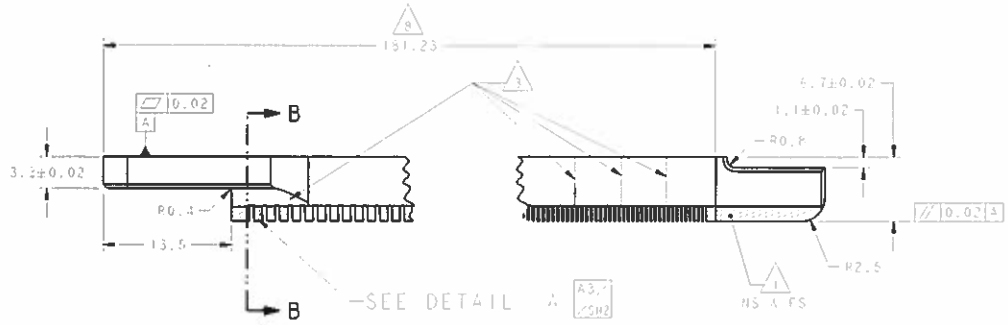

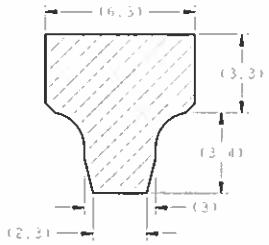

SECTION B-B
SCALE 10/1
FOR REFERENCE ONLY

2146121-05 SHOWN

Released
MASTER DRAWING
REVISION BY
EO ONLY
ASTROH FILE COPY
8-Aug-11
DYoder/CMO

ITEM NO	REQD	REQD	REQD	REQD	PART NO.	DESCRIPTION	MATERIAL	MAT'L SPEC OR CAGE CODE
7	1	1	1	1	1084-3CN020	INS INSERT, M3 x 0.5 x 3.0	SILVER PLATED ST STEEL	SEE NOTE 4
6	AR	AR	AR	AR		PLATE, AL ALY	7075-T7351	QQ-A-250/12 ASTM B209
5		1			2146121-07	SUPPORT BAR SECONDARY BOTTOM		
4			1		2146121-06	SUPPORT BAR SECONDARY TOP		
3				1	2146121-05	SUPPORT BAR PRIMARY BOTTOM		
2					2146121-04	SUPPORT BAR PRIMARY TOP		

LIST OF MATERIAL

THIRD ANGLE PROJECTION

HARDWARE CLASSIFICATION: A

INCH

HYBRID METRIC/INCH

METRIC

TOLERANCES FOR INCH

TOLERANCES FOR METRIC

Goddard Space Flight Center

NAME	INIT.	DATE
B HANNE	DH	7/24/2011
B HANNE	DH	7/29/2011
C BASTE	CB	7/19/2011
I ORSJING	IO	7/26/2011
J CROW	JC	8/1/2011
F TERLEMITSOS	FT	7/26/2011

SUPPORT BAR

D 36FC1 2146121 A

SCALE 4/1 SHEET 1 OF 2

NAME	INIT.	DATE
N GRASSI	NG	8/1/2011

PROE/ASTROH AFS
ASTRO-MISST
2146101 ASTRO-MISST
2146121 REV A.3
2146121 REV A.2
NEXT ASSY USED ON

ITAR RESTRICTED DATA

Technical data contained in this document is subject to export controls under the International Traffic in Arms Regulations (Title 22, CFR Parts 120-130). These items are licensed by the United States for ultimate destination to the Japanese Aerospace Exploration Agency (and related entites, e.g. contractors and subcontractors). Diversion, retransfer, disclosure, or use contrary to applications specified in the NASA agreement without prior U.S. authorization is prohibited.

REVISION				
ZONE	DESCRIPTION	DATE	APPR VAL
-	-	SEE SHEET 1 FOR REVISIONS		

GROOVE NO.	POSITION FROM	ANGLE°
1	1	0
2	2	0
3	3	0
4	4	0
5	5	0
6	6	0
7	7	0
8	8	0
9	9	0
10	10	0
11	11	0
12	12	0
13	13	0
14	14	0
15	15	0
16	16	0
17	17	0
18	18	0
19	19	0
20	20	0
21	21	0
22	22	0
23	23	0
24	24	0
25	25	0
26	26	0
27	27	0
28	28	0
29	29	0
30	30	0
31	31	0
32	32	0
33	33	0
34	34	0
35	35	0
36	36	0
37	37	0
38	38	0
39	39	0
40	40	0
41	41	0
42	42	0
43	43	0
44	44	0
45	45	0
46	46	0
47	47	0
48	48	0
49	49	0
50	50	0
51	51	0
52	52	0
53	53	0
54	54	0
55	55	0
56	56	0
57	57	0
58	58	0
59	59	0
60	60	0
61	61	0
62	62	0
63	63	0
64	64	0
65	65	0
66	66	0
67	67	0
68	68	0
69	69	0
70	70	0
71	71	0
72	72	0
73	73	0
74	74	0
75	75	0
76	76	0
77	77	0
78	78	0
79	79	0
80	80	0
81	81	0
82	82	0
83	83	0
84	84	0
85	85	0
86	86	0
87	87	0
88	88	0
89	89	0
90	90	0
91	91	0
92	92	0
93	93	0
94	94	0
95	95	0
96	96	0
97	97	0
98	98	0
99	99	0
100	100	0
101	101	0
102	102	0
103	103	0
104	104	0
105	105	0
106	106	0
107	107	0
108	108	0
109	109	0
110	110	0
111	111	0
112	112	0
113	113	0
114	114	0
115	115	0
116	116	0
117	117	0
118	118	0
119	119	0
120	120	0
121	121	0
122	122	0
123	123	0
124	124	0
125	125	0
126	126	0
127	127	0
128	128	0
129	129	0
130	130	0
131	131	0
132	132	0
133	133	0
134	134	0
135	135	0
136	136	0
137	137	0
138	138	0
139	139	0
140	140	0
141	141	0
142	142	0
143	143	0
144	144	0
145	145	0
146	146	0
147	147	0
148	148	0
149	149	0
150	150	0
151	151	0
152	152	0
153	153	0
154	154	0
155	155	0
156	156	0
157	157	0
158	158	0
159	159	0
160	160	0
161	161	0
162	162	0
163	163	0
164	164	0
165	165	0
166	166	0
167	167	0
168	168	0
169	169	0
170	170	0
171	171	0
172	172	0
173	173	0
174	174	0
175	175	0
176	176	0
177	177	0
178	178	0
179	179	0
180	180	0
181	181	0
182	182	0
183	183	0
184	184	0
185	185	0
186	186	0
187	187	0
188	188	0
189	189	0
190	190	0
191	191	0
192	192	0
193	193	0
194	194	0
195	195	0
196	196	0
197	197	0
198	198	0
199	199	0
200	200	0
201	201	0
202	202	0
203	203	0

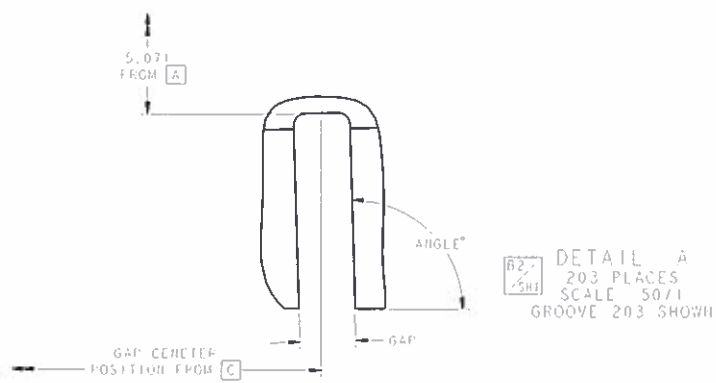

Released
MASTER DRAWING
REVISION BY
EO ONLY
ASTRO-H FILE COPY
11-Aug-11
DYoder/CMO

SUPPORT BAR

USE OR DISCLOSURE OF DATA CONTAINED ON THIS SHEET IS SUBJECT TO THE RESTRICTION(S) ON THE SHEET 1 OF THIS DRAWING

SIZE	DWG NO	REV	
D	36FC1	2146121	A
SCALE 4/1		SHEET 2 OF 2	

NOTES: UNLESS OTHERWISE SPECIFIED

1. COAT INDICATED MATCHED SURFACES PER MIL-DTL-5541F TYPE I, CLASS 3
2. ANODIZE PER MIL-A-8625F TYPE II, CLASS 2, COLOR BLACK.
3. MARK VERTICAL LINE EVERY TENTH GROOVE ON BOTH SIDES (AW NOTE 5). TERMINATE LINE 5.0 FROM A
4. MARK PART NUMBER, REVISION LEVEL, AND UNIQUE SERIAL NUMBER WITH 3.0 HIGH CHARACTERS (AW NOTE 5). EX: 2146122-01 REV A 001
5. LASER ENGRAVE PART 0.015 DEEP MAX
6. INSTALL INSERTS PER NASM33537 AFTER SURFACE TREATMENT. REMOVE DRIVING TANG.
   ORIGINAL SOURCE OF SUPPLY:
   EMHART FASTENING TEKNOLOGIES
   INDUSTRIAL DIVISION
   510 RIVER ROAD
   SHELTON, CT 06484
7. DIMENSION APPLY AFTER ALL SURFACE TREATMENTS

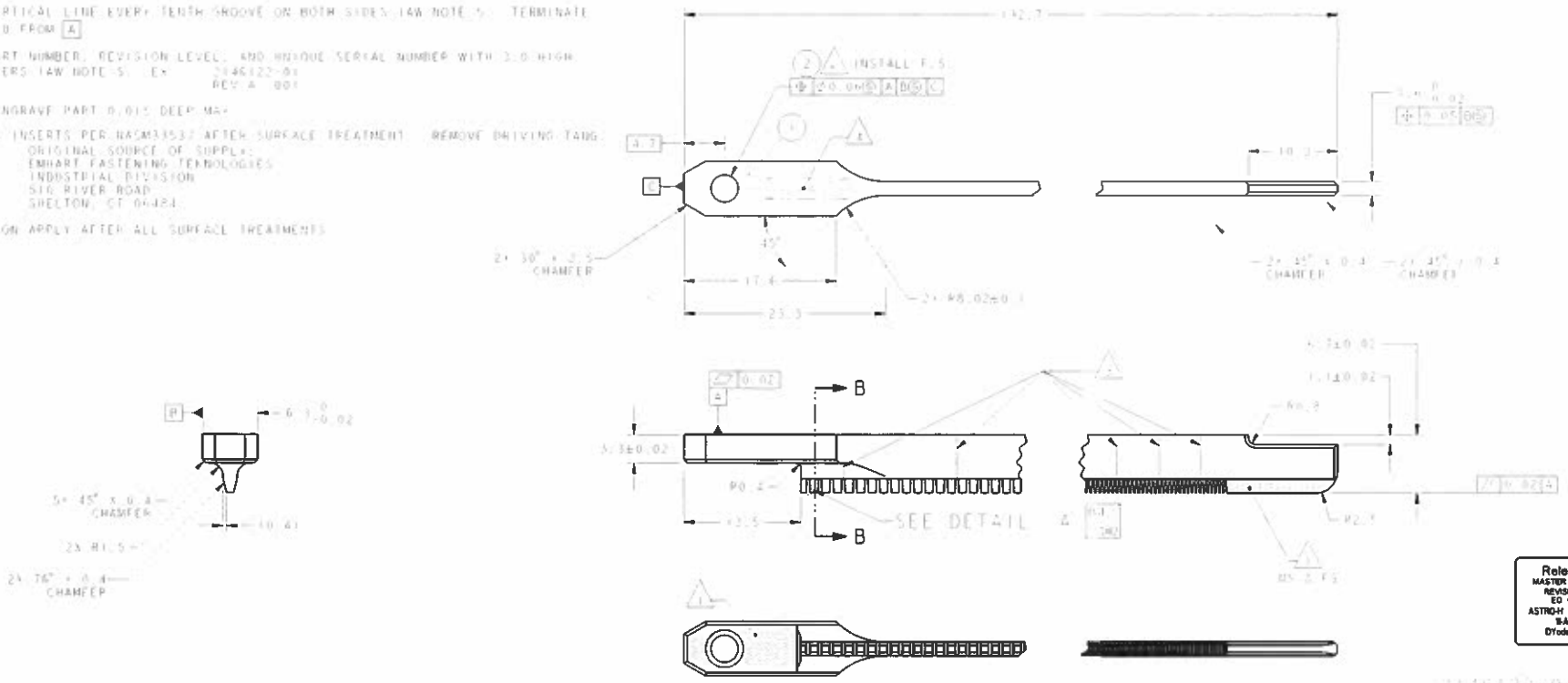

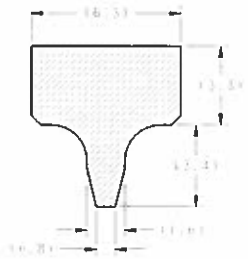

SECTION B-B
SCALE 10/1
FOR REFERENCE ONLY

ITAR RESTRICTED DATA

Technical data contained in this document is subject to export controls under the International Traffic in Arms Regulations (Title 22, CFR Parts 120-130). These items are licensed by the United States for ultimate destination to the Japanese Aerospace Exploration Agency (and related entites, e.g. contractors and subcontractors). Diversion, retransfer, disclosure, or use contrary to applications specified in the NASA agreement without prior U.S. authorization is prohibited.

REV	DESCRIPTION	DATE
	INITIAL RELEASE	
A	REVISED PER EO 001	07/11/2001

ITEM NO.	REQ'D	PART NO.	DESCRIPTION	MATERIAL	MAT'L SPEC OR CAGE CODE
1	1	2146122-01	ALIGNMENT BAR, PRIMARY TOP		
2	1	2146122-02	ALIGNMENT BAR, PRIMARY BOTTOM		
3	1	2146122-03	ALIGNMENT BAR, SECONDARY TOP		
4	1	2146122-04	ALIGNMENT BAR, SECONDARY BOTTOM		
5	1	2146122-05	ALIGNMENT BAR, PRIMARY TOP		
6	1	2146122-06	ALIGNMENT BAR, PRIMARY BOTTOM		
7	1	2146122-07	ALIGNMENT BAR, SECONDARY TOP		
8	1	2146122-08	ALIGNMENT BAR, SECONDARY BOTTOM		
9	1	2146122-09	ALIGNMENT BAR, PRIMARY TOP		
10	1	2146122-10	ALIGNMENT BAR, PRIMARY BOTTOM		

LIST OF MATERIAL

THIRD ANGLE PROJECTION

INCH
HYBRID METRIC/INCH
METRIC

A

Goddard Space Flight Center

NAME	UNIT	DATE
D. HANNA	DH	01/11/2001
D. HANNA	DH	01/11/2001
[illegible]	CW	01/11/2001
[illegible]	RD	01/11/2001
[illegible]	JC	01/11/2001
[illegible]		
[illegible]	RC	01/11/2001

ALIGNMENT BAR

D 36FC1 2146122 A

NAME	UNIT	DATE
[illegible]	RG	07/11/2001

INTRELISA
2146122 REV A.5
2146122 REV A.2

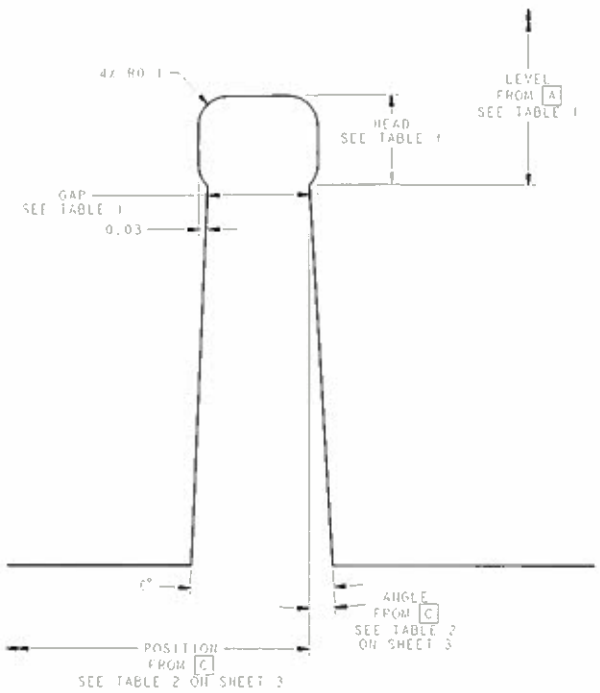

B2/1 SHT

DETAIL A
-01 THROUGH -07
SCALE 125/1
203 PLACES
GROOVE NO. 203 SHOWN

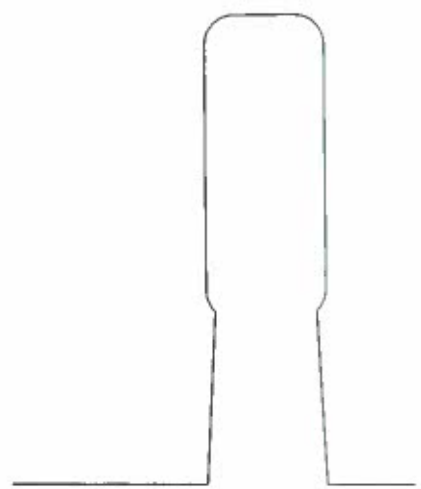

DETAIL A
-09 THROUGH -15
SCALE 125/1

TABLE 1

INSTANCE	HEAD ±.02	LEVEL ±.005
2146122-01	0.3	5.42
2146122-03	0.3	5.42
2146122-05	0.3	5.42
2146122-07	0.3	5.42
2146122-09	1	6.12
2146122-11	1	6.12
2146122-13	1	6.12
2146122-15	1	6.12

Released
MASTER DRAWING
REVISION BY
EO ONLY
ASTRO-H FILE COPY
9-Aug-11
DYoder/CMO

ALIGNMENT BAR

D 36FC1 2146122 A

USE OR DISCLOSURE OF DATA CONTAINED ON THIS SHEET IS SUBJECT TO THE RESTRICTION(S) ON THE SHEET 1 OF THIS DRAWING

REV	ZONE	DESCRIPTION	DATE	APPROVAL
-	-	SEE SHEET 1	-	

TABLE 2

Released
MASTER DRAWING
REVISION BY
EO ONLY
ASTRO-H FILE COPY
11-Aug-11
DYoder/CMO

ALIGNMENT BAR
PRIMARY TOP

SIZE	DWG NO	REV	SHEET
D	36FC1	2146122	A

USE OR DISCLOSURE OF DATA CONTAINED ON THIS SHEET IS SUBJECT TO THE RESTRICTION(S) ON THE SHEET 1 OF THIS DRAWING